NATIONAL
FOREST
INVENTORY

ROMANIAN NATIONAL FOREST INVENTORY

2nd International Workshop on Forest Inventory Statistics

Kromeriz, 23-26 Mai 2016

Olivier Bouriaud, Gheorghe Marin

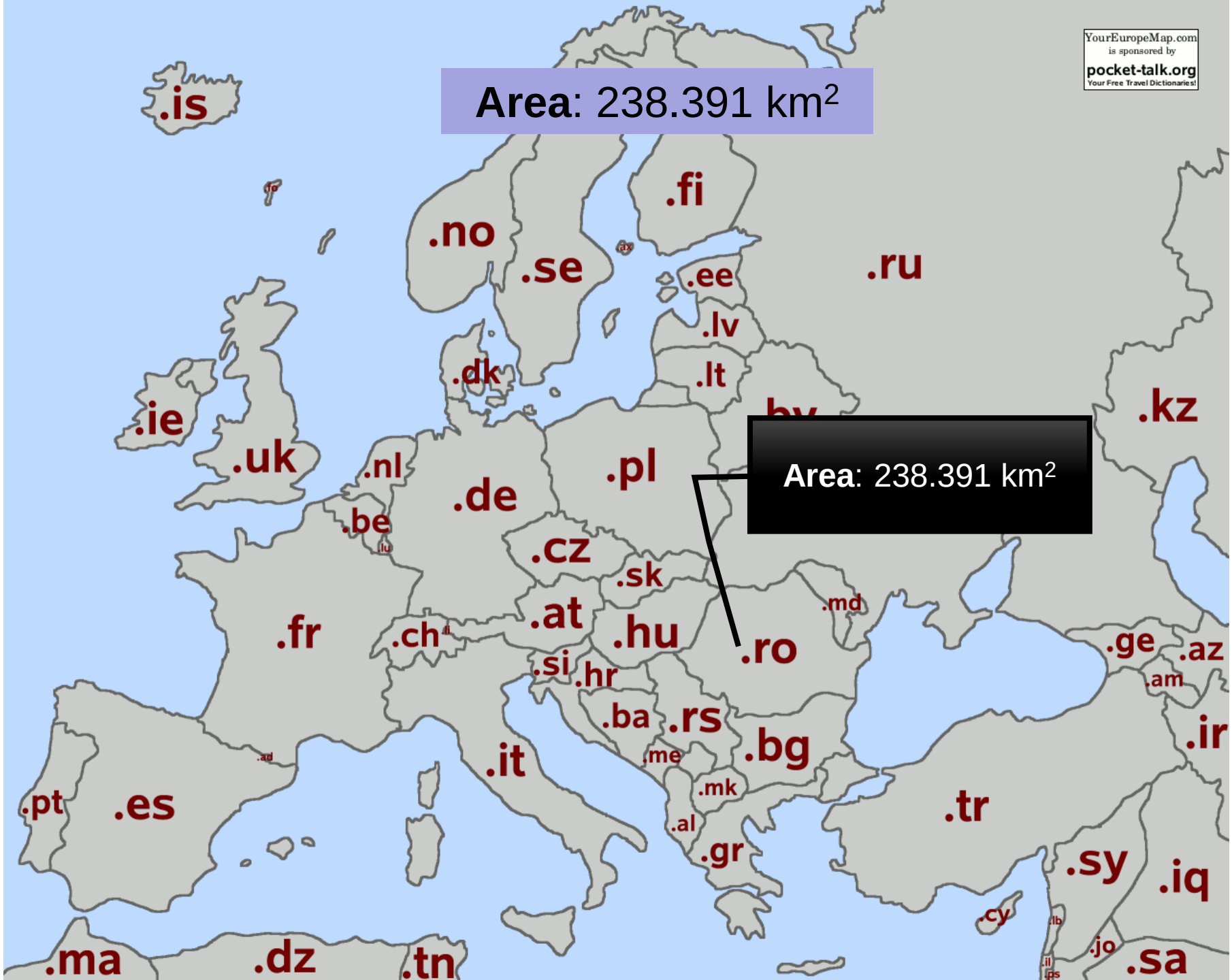
YourEuropeMap.com
is sponsored by
pocket-talk.org
Your Free Travel Dictionaries!
Area: 238.391 km2
Area: 238.391 km2
.is
.fi
.no
.se
.ee
.ru
.lv
.lt
.dk
.ie
.uk
.nl
.de
.pl
.kz
.be
.lu
.cz
.sk
.md
.fr
.ch
.at
.hu
.ro
.ge
.az
.am
.si
.hr
.ba
.rs
.me
.bg
.ir
.it
.mk
.al
.gr
.pt
.es
.tr
.sy
.iq
.cy
.lb
.jo
.il
.ps
.sa
.ma
.dz
.tn

NATIONAL
FOREST
INVENTORY

Content

Sampling

Estimation methods

Implementation

NATIONAL FOREST INVENTORY

Sampling

Phase 1: photointerpretation

500 x 500 m systematic grid, 1 point

Phase 2: field sampling, 2 grids

Mountains, hills
4 x 4 km

Lowlands
2 x 2 km

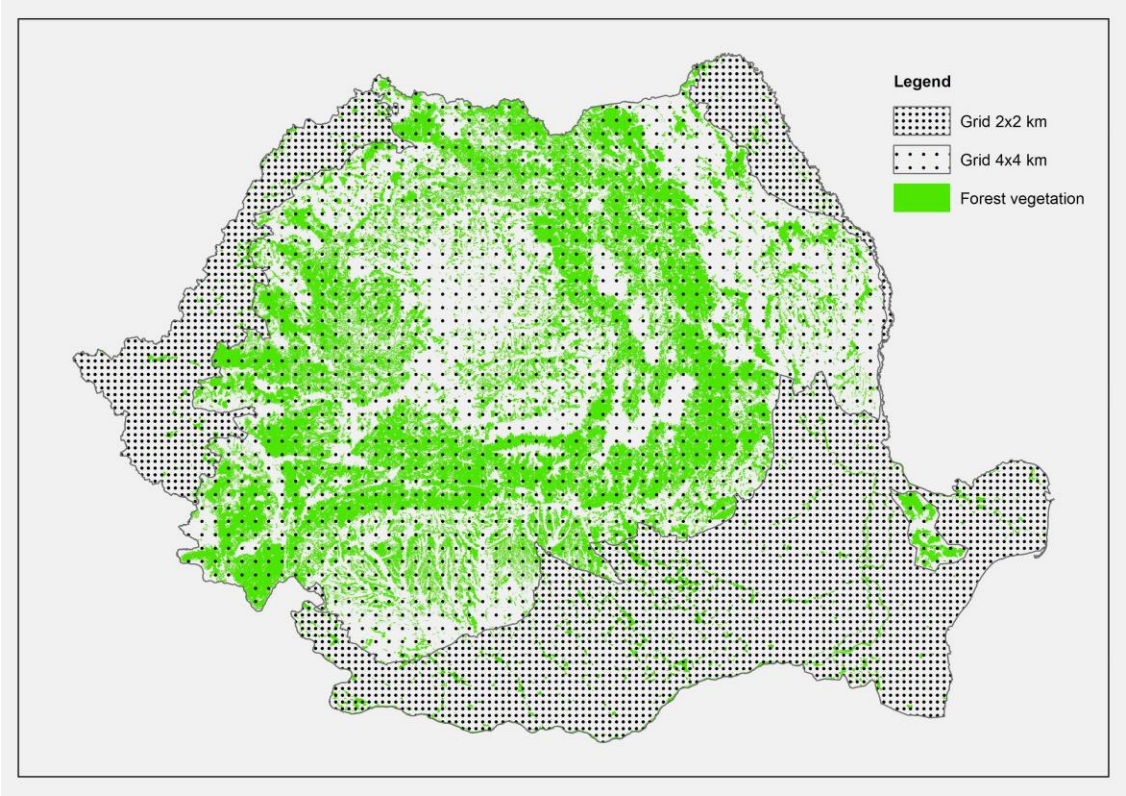

NATIONAL FOREST INVENTORY

Sampling

Field plots = permanent plots, clusters of 4 subplots

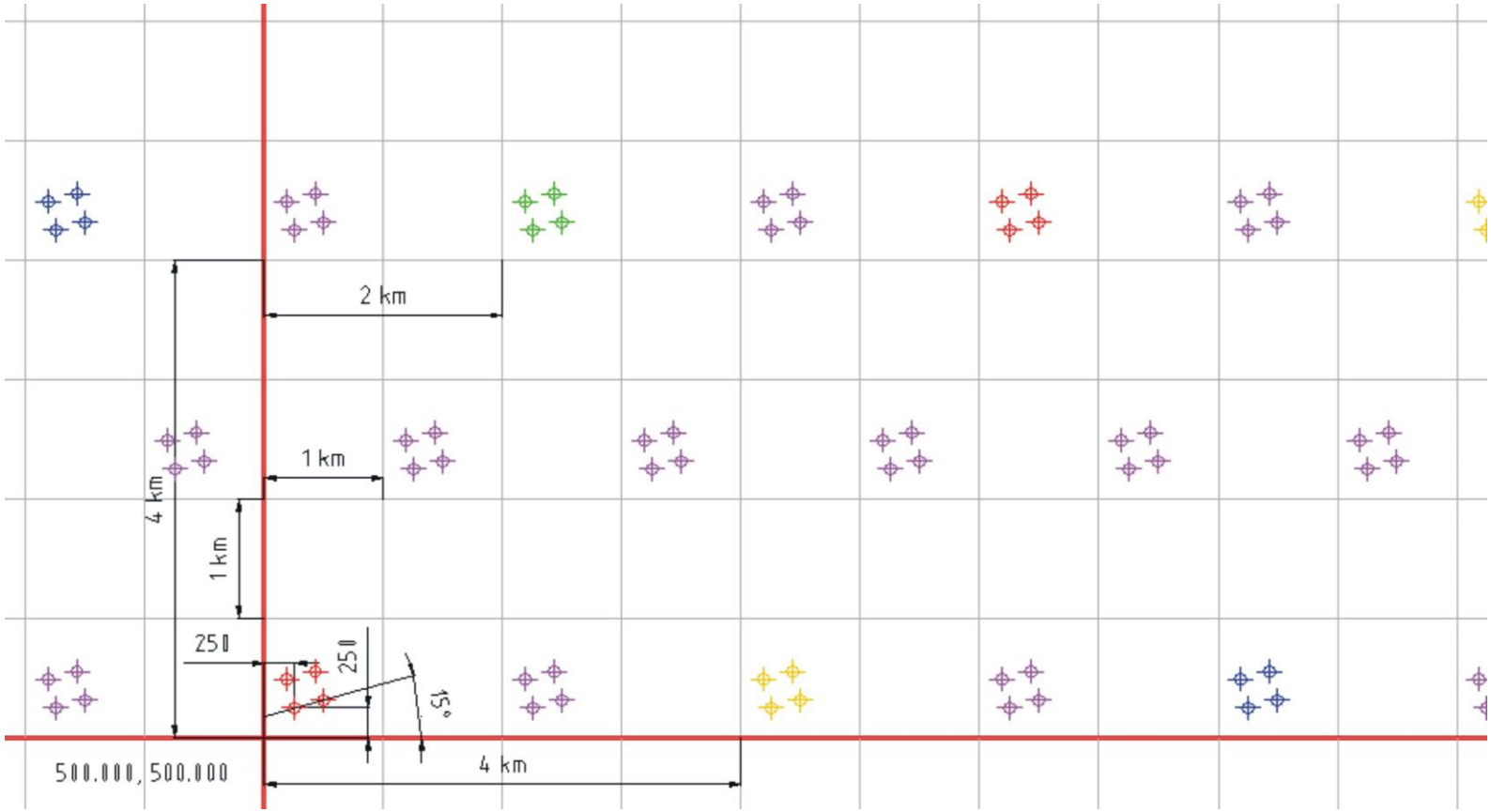

NATIONAL FOREST INVENTORY

Sampling

NATIONAL FOREST INVENTORY

Sampling

Sample plot design

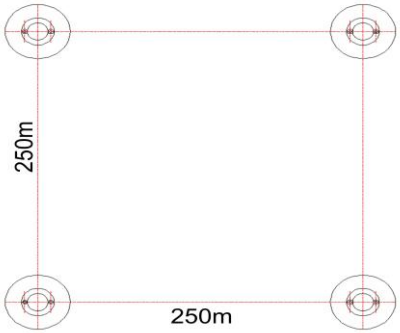

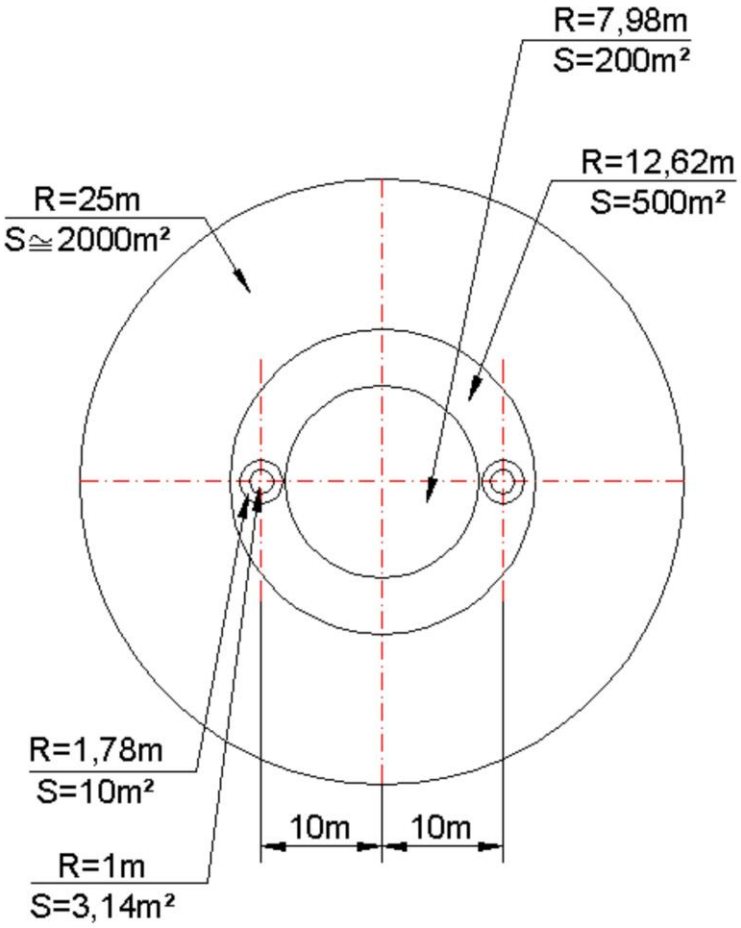

5.6 cm < dbh < 28.5 cm 200 m^2 circle

28.5 cm ≤ dbh 500 m^2 circle

h measured on all trees

NATIONAL
FOREST
INVENTORY

II. Field data collection database

I. Tract identification data

II. Sample plot identification data

III. Sub-plot identification data

IV. Forest stand data

V. Forest site data

VI. Forest regeneration

VII. Laying deathwood data

VIII. Tree data

IX. Management data

X. Forest accessibility data

NATIONAL FOREST INVENTORY

Sampling

Subplots are mapped (splittable)

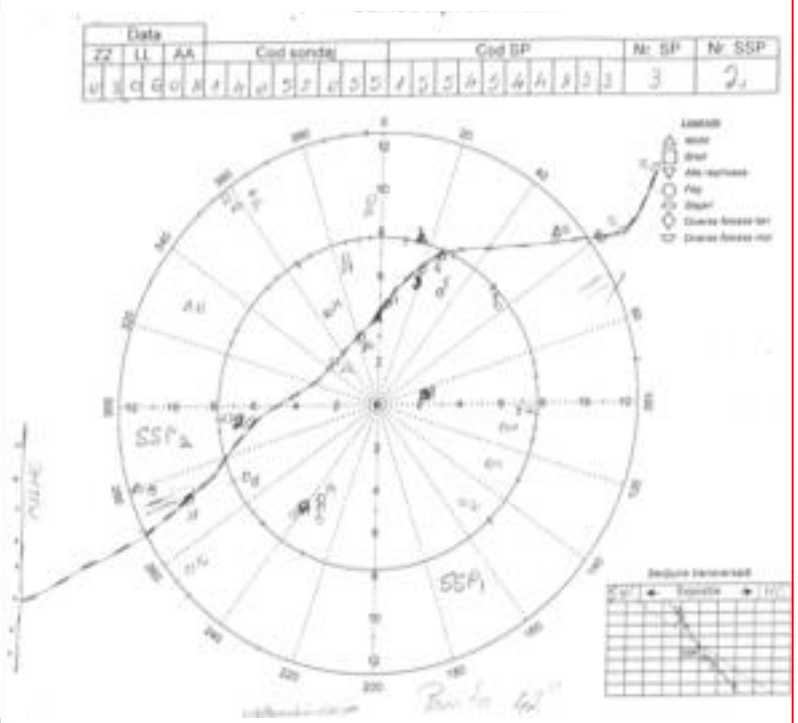

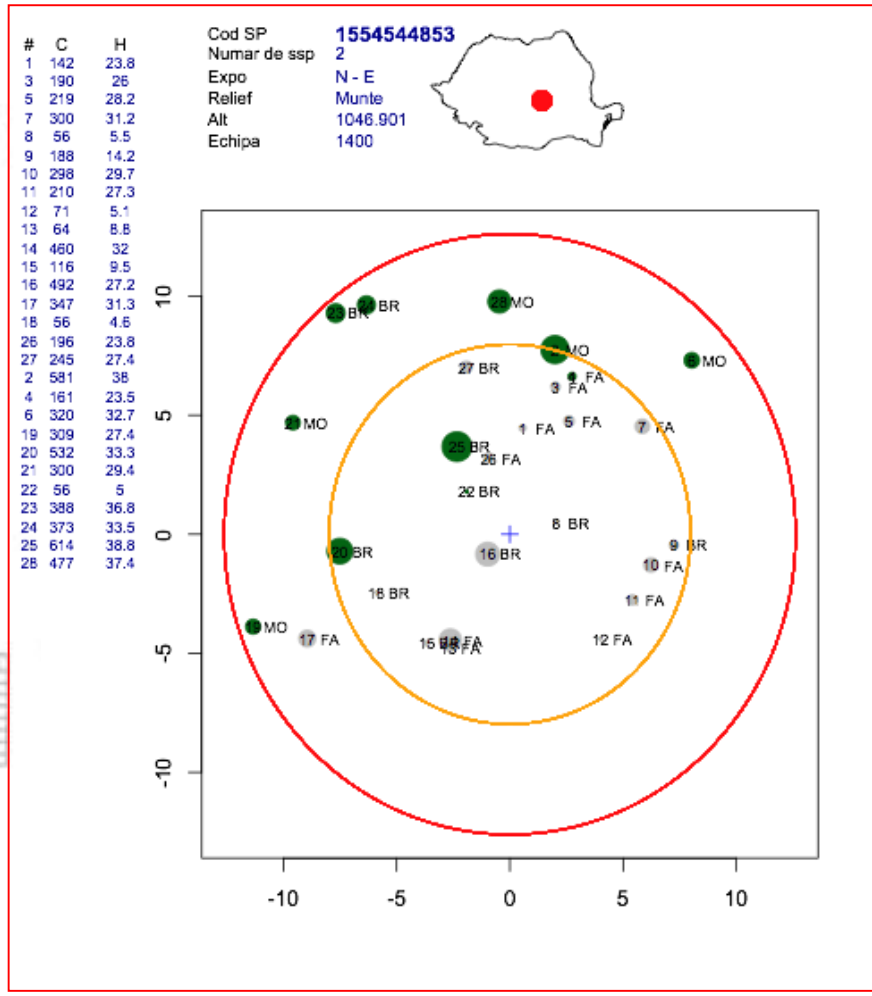

NATIONAL FOREST INVENTORY

Sampling

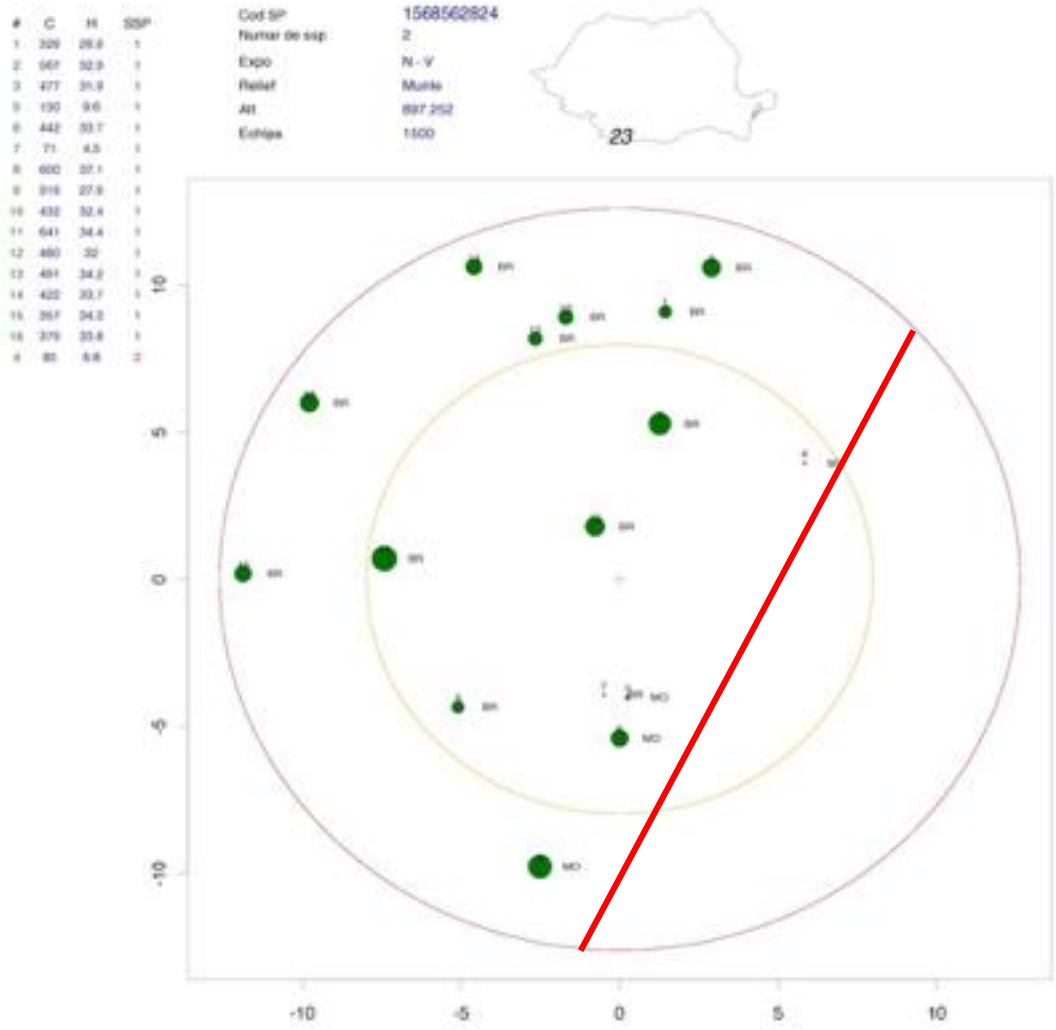

NATIONAL
FOREST
INVENTORY

Sampling
Estimation methods

NATIONAL FOREST INVENTORY

Stratification

Sampling-driven

(varying plot density)

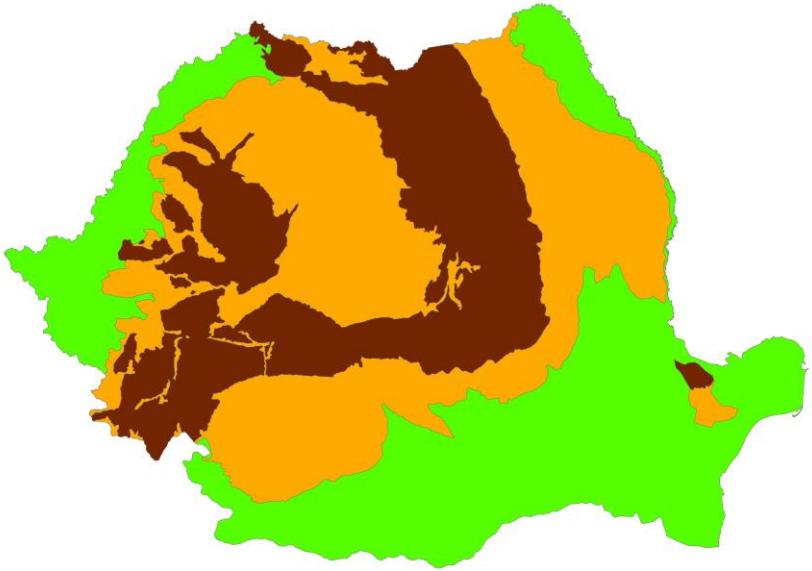

Reporting-driven

report per region

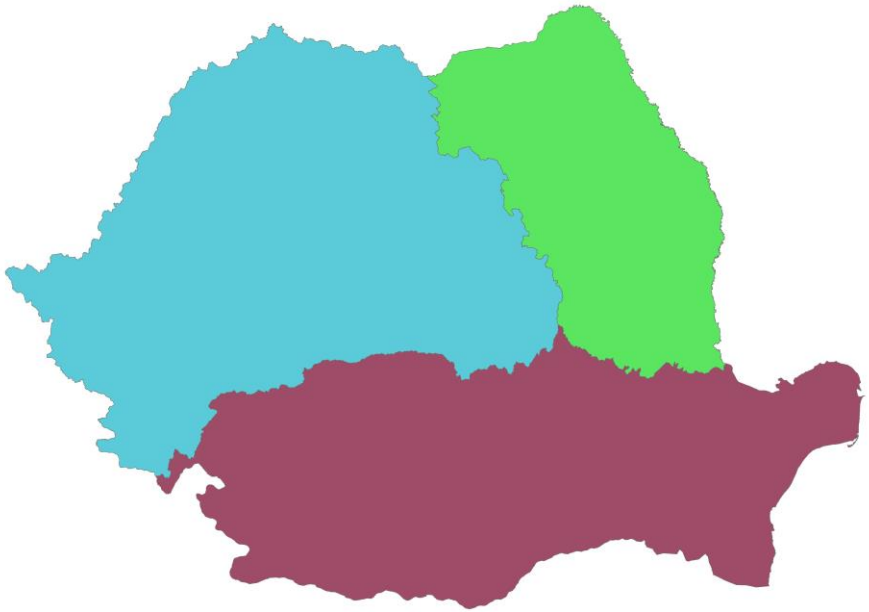

NATIONAL
FOREST
INVENTORY

Stratification

Pre-stratification =

3 regions x 3 relief zones

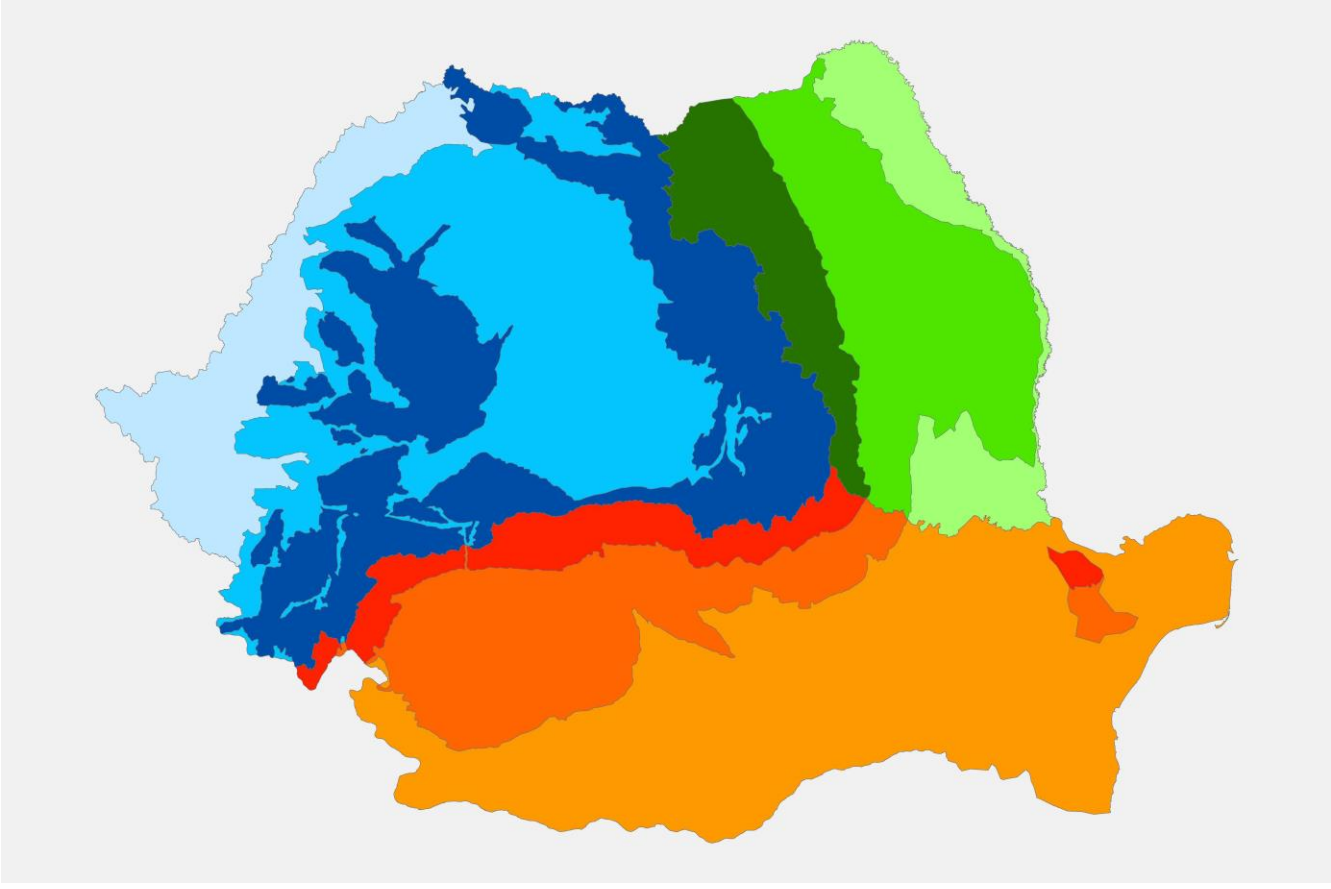

NATIONAL FOREST INVENTORY

Stratification

Post-stratification =

cluster stratification, based on phase 1 photointerpretation

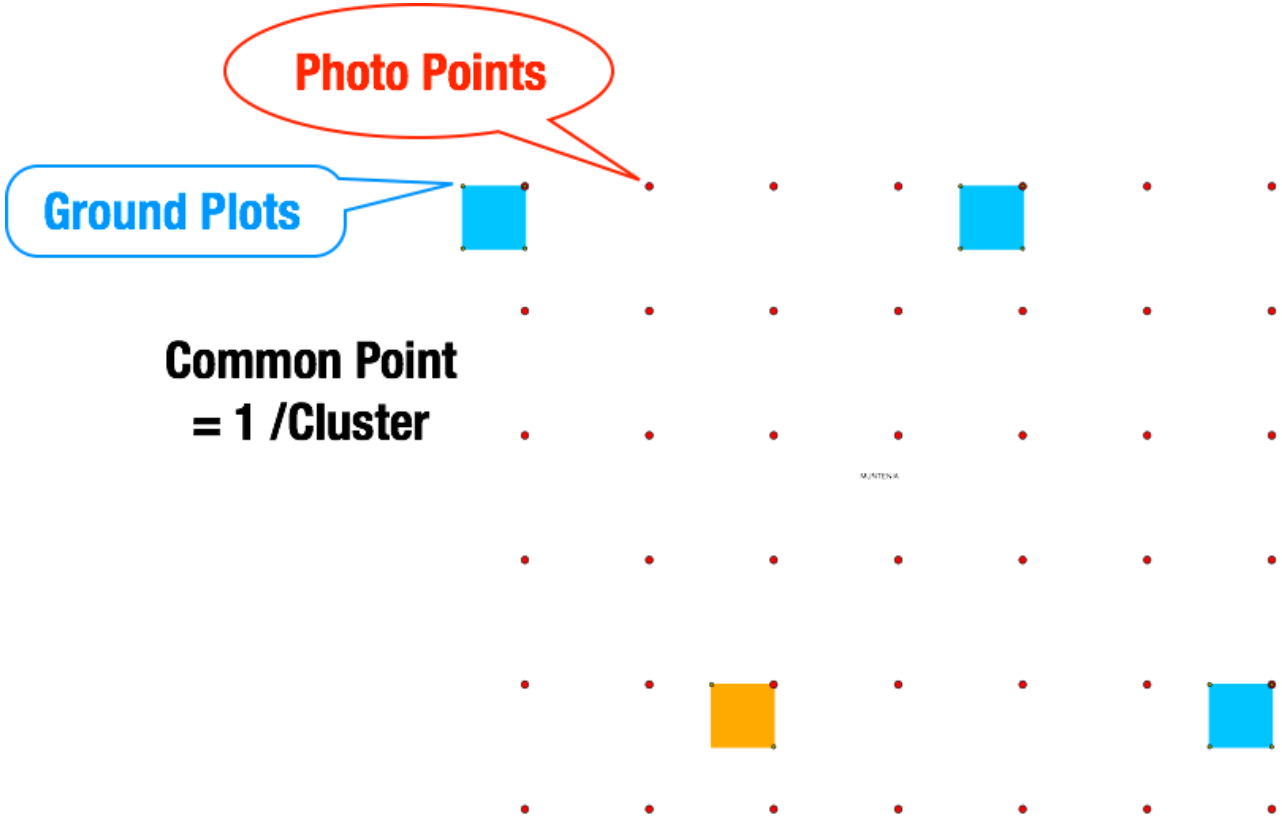

NATIONAL FOREST INVENTORY

Estimators

Implemented at prestratification-stratum level

Area forest veget. $A_{VF} = \sum_{h} A_h . \bar{a}_{VF,h}$

Sum over all strata

$$A_h = A_{zone} \times \hat{p}_{VF}$$

GIS, known *Phase 1*

$\bar{a}_{VF,h}$ *Phase 2* Stratum mean (unitless)

$$\bar{a}_{VF,h} = \frac{\sum_{i}^{N_i} \bar{a}_{VF,h,i}}{N_i}$$

NATIONAL FOREST INVENTORY

Estimators

Stratum mean = mean of cluster means

$$\hat{\bar{a}}_{hk} = \frac{\sum_{i=1}^{N_h} \bar{a}_{ki}}{N_h}$$

h	stratum
k	target category
i	plot (cluster)
j	subplot

cluster mean = mean of subplot values

$$\bar{a}_{ki} = \frac{\sum_{j=1}^{M_i} a_{kij}}{M_i} = \frac{\sum_{j=1}^{M_i} \sum_{l=1}^{L_{ij}} \delta_{ijl}.a_{kijl}}{\sum_{i=1}^{n} M_i.a_0}$$

NATIONAL FOREST INVENTORY

Estimators

Stratum mean = mean of cluster means

$$\hat{\bar{a}}_{hk} = \frac{\sum_{i=1}^{N_h} \bar{a}_{ki}}{N_h}$$

h	stratum
k	target category
i	plot (cluster)
j	subplot

cluster mean = mean of subplot values

$$\bar{v}_{ki} = \frac{\sum_{j=1}^{M_i} \sum_{l=1}^{L_{ij}} \delta_k \, v_{ijl}}{\sum_{j=1}^{M_i} a_0}$$

L_{ij} subplot fraction

$$\bar{v}_{ki} = \frac{\sum_{j=1}^{M_i} \sum_{t=1}^{T_{ij}} \delta_k \, v_{ijt}}{\sum_{j=1}^{M_i} a_0}$$

T_{ij} Tree-level selection

NATIONAL FOREST INVENTORY

Estimators

$$Var(\hat{\bar{y}}_{hk}) = \frac{\sum_{i=1}^{N_h}(\bar{y}_{hki} - \hat{\bar{y}}_{hk})^2}{N_h(N_h - 1)}$$

h	stratum
k	target category
i	plot (cluster)
j	subplot

$$\widehat{Var}(\hat{Y}_{kz}) = A_z^2 \left[\sum_{h=1}^{H} \frac{n'_h(n'_h - 1)}{n'_z(n'_z - 1)} V(y_{ki}) + \frac{1}{n'_z - 1} \sum_{h=1}^{H} \frac{n'_h}{n'_z} (\bar{y}_{hk} - \bar{y}_{zk})^2 \right]$$

NATIONAL FOREST INVENTORY

Estimators

$$X = \sum_i x_i \; and \; Y = \sum_i y_i,$$

$$\hat{R} = \frac{X}{Y},$$

$$u_i = x_i - y_i \times \hat{R}$$

h	stratum
k	target category
i	plot (cluster)
j	subplot

$$\bar{u}_h = \frac{\sum_{i=1}^{n_h} u_i}{n_h}$$

$$V(u_i) = \frac{\sum_{i=1}^{n_h} (u_i - \bar{u}_h)^2}{n_h(n_h - 1)}$$

$$\widehat{Var}(\hat{U}_r) = \sum_{h=1}^{H} \frac{n'_h(n'_h - 1)}{n'_r(n'_r - 1)} V(u_i) + \frac{1}{n'_r - 1} \sum_{h=1}^{H} \frac{n'_h}{n'_r} (\bar{u}_h - \bar{u}_r)^2$$

NATIONAL
FOREST
INVENTORY

Estimation methods

NATIONAL FOREST INVENTORY

Implementation

Reporting expectations : pre-defined tables

	Pre-defined Y values: region, relief, property, vegetation type, NUTS2
Pre-defined X values: age class, dbh, stand attributes	

NATIONAL FOREST INVENTORY

Implementation

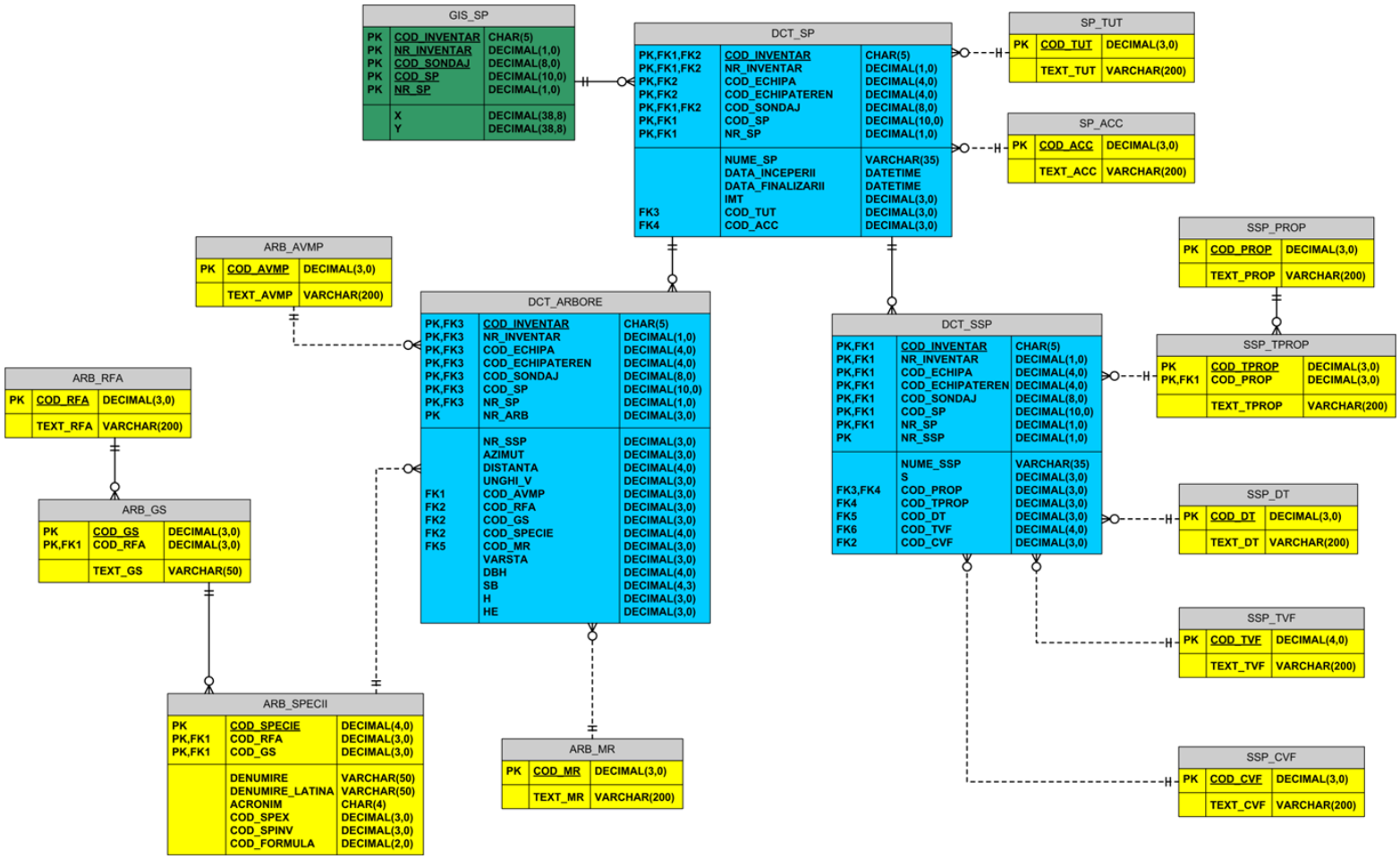

NATIONAL FOREST INVENTORY

Implementation

Microsoft .NET

C#

ORACLE

PostgreSQL

SQL

R

ubuntu

NATIONAL FOREST INVENTORY

Implementation

$$\hat{\bar{a}}_{hk} = \frac{\sum_{i=1}^{N_h} \bar{a}_{ki}}{N_h}$$

$$\bar{v}_{ki} = \frac{\sum_{j=1}^{M_i} \sum_{l=1}^{L_{ij}} \delta_k \, v_{ijl}}{\sum_{j=1}^{M_i} a_0}$$

$$Var(\hat{\bar{y}}_{hk}) = \frac{\sum_{i=1}^{N_h} (\bar{y}_{hki} - \hat{\bar{y}}_{hk})^2}{N_h(N_h - 1)}$$

R: sqldf and data.table packages =

- Fast joins
- Variance, mean or counts + back joins

NATIONAL
FOREST
INVENTORY

Implementation

NATIONAL FOREST INVENTORY

First cycle completed

Some major outcomes

- Forest area = 6,900,000 ha
- Growing stock = 2.2 billion m^3

Second cycle > 50% completed

Some major expectations

- Volume growth
- Harvest / drain

NATIONAL
FOREST
INVENTORY

Thank you